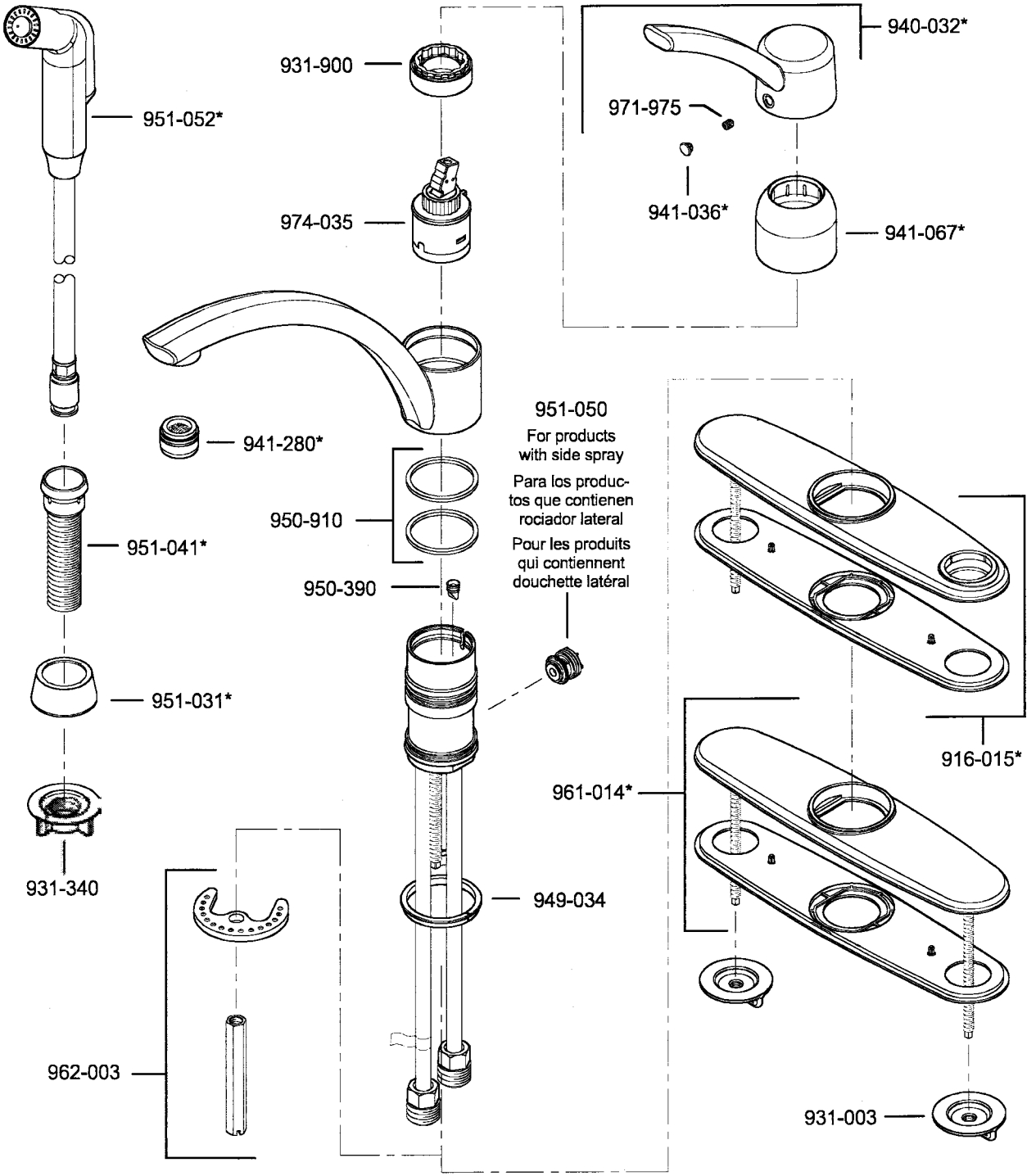34 Series Parisa® Collection Single-Control Kitchen Faucet